122 CM CLASSIC SIDE-BY-SIDE REFRIGERATOR/FREEZER - PANEL READY

ICBCL4850S/O

FEATURES

Sub-Zero offers an industry-leading full two-year warranty on appliances, along with a full five-year sealed system warranty

ClearSight™ LED lighting system fully illuminates the interior and reduces shadows

Split Climate™ intelligent cooling system revolutionises Sub-Zero's already-superior preservation capabilities, keeping food even fresher for longer

Night Mode optimizes the interior lighting based on the detected ambient light, reducing the brightness by 90% in dim environments

Touch control panel is conveniently located for easy access at the tap of a finger

Sleek stainless accents trim the interior, matching the sophistication of the exterior

Lift the base of the flip-up dairy compartment to store taller items on the shelf below

Ready to be fitted with custom panels and handles to blend with cabinetry

Fresh-tasting, odourless, filtered ice ready on demand; activate Max Ice Mode to temporarily increase ice production

Position adjustable door bins at various heights to accommodate assorted items

ACCESSORIES

Air Purification Cartridge

Egg Container

Grilles for 83" or 88" finished height (84" is standard)

Stainless Steel Flush Inset Door and Drawer Panels with Pro Handle

Stainless Steel Flush Inset Door and Drawer Panels with Tubular Handle

Classic Stainless Steel Pro Louvered Grilles

Stainless Steel Pro Handles

Stainless Steel Tubular Handles

Stainless Steel Kickplate

Accessories are available through an authorized dealer.
For local dealer information, visit subzero-wolf.com/locator.

HANDLE ACCESSORIES

PRO

TUBULAR

PRODUCT DETAILS

REFRIGERATOR

- 5 glass refrigerator shelves (4 adjustable; 1 stationary)
- 4 crisper drawers with removable dividers
- 5 refrigerator door bins (3 adjustable; 2 stationary)
- 1 flip-up dairy compartment
- Air purification system
- LED refrigerator and freezer lights

FREEZER

- Ice drawer with automatic ice maker
- 5 adjustable door bins
- 2 storage drawers
- Water filtration system

Specifications are subject to change without notice. This information was generated on April 26, 2024. Verify specifications prior to finalizing your cabinetry/enclosures.

122 CM CLASSIC SIDE-BY-SIDE REFRIGERATOR/FREEZER - PANEL READY

PRODUCT SPECIFICATIONS

Model	ICBCL4850S/O
Dimensions	1219mmW x 2134mmH x 610mmD
Refrigerator Capacity	568 L
Freezer Capacity	322 L
Electrical Supply	220-240 VAC; 50/60 Hz
Electrical Service	≤ 4 A
Receptacle	3-prong grounding-type

PANEL SPECIFICATIONS For complete panels specifications including width/height, weight requirements, thickness requirements and offset details visit subzero-wolf.com/builtinconfigurator.

NOTE: Dimensions in parenthesis are in millimeters unless otherwise specified

INTERIOR VIEW

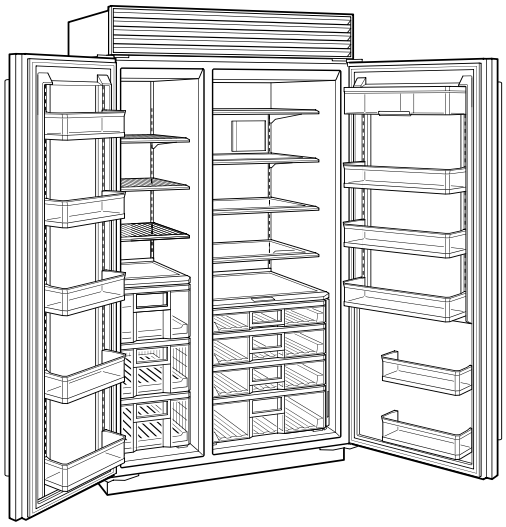

This illustration is intended for interior reference only and may not represent the exterior of the model being specified.
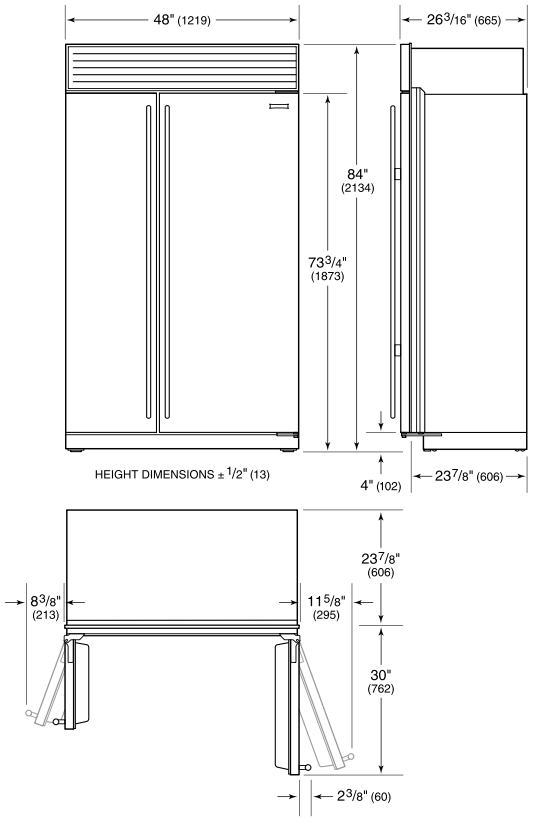
DIMENSIONS